Cambridgeport

SUBMITTAL

Part Number 2015246

SUBMITTED TO _____

COMPANY _____

JOB NAME _____

EQUIPMENT _____

SIGNATURE _____

DATE _____

SUBMITTAL

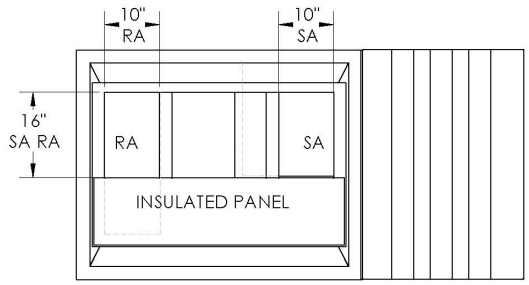

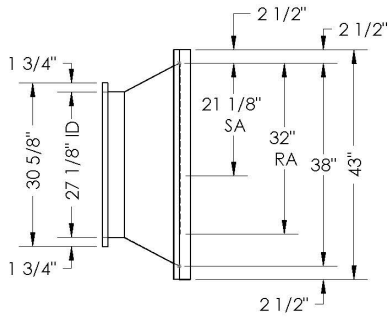

FEATURES:

1. ONE PIECE WELDED CONSTRUCTION
2. CURB ADAPTER MADE OF HEAVY GAUGE GALVANIZED STEEL.
3. ALL WELDS ARE COATED WITH A GALVANIZED COMPOUND.
4. GASKETING IS PROVIDED FOR UNIT TO CURB ADAPTER SEALING.
5. CURB ADAPTER IS FULLY INSULATED.
6. SUPPLY TRANSITION AND RETURN PLENUM INCLUDED.
7. BLANK-OFF PANEL SHIPPED LOOSE FOR FIELD INSTALLATION.

Approved By: _____

Date: _____

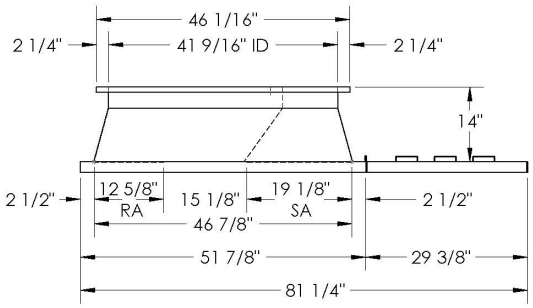

MATERIAL: 18 GA GALV. (124.6 LBS.)

FEATURES

ONE PIECE WELDED CONSTRUCTION

FACTORY INSTALLED SUPPLY TRANSITIONS

FULLY INSULATED

DESIGNED FOR EVEN WEIGHT DISTRIBUTION

FABRICATED OF HEAVY GAUGE G90 GALVANIZED STEEL

ALL WELDS SPRAYED WITH GALVANIZING COMPOUND

GASKET PROVIDED FOR UNIT TO ADAPTER SEALING

CAMBRIDGEPORT STRONGLY RECOMMENDS CONFIRMING THE DIMENSIONS ON THIS SUBMITTAL

CURB ADAPTERS ARE BASED ON UNIT MANUFACTURERS STANDARD CURB DIMENSIONS.
CAMBRIDGEPORT CANNOT BE RESPONSIBLE FOR ANY DEVIATIONS FROM FACTORY DIMENSIONS OR INCORRECT MODEL NUMBERS.